Liteline

PAR222/38

ATHENA Line Voltage Track Fixture for PAR38 Lamps

Track Systems

Job Information		
Project Name		Type
Location		
Quantity		Date
Contact/Phone		
Notes		

Features

Body
Constructed of die cast aluminum which provides superior strength and rigidity. Softened edges adds up to the low profile aesthetic design.

Lamping
Porcelain socket for 120V PAR38 lamps, 150 watts max. A high temperature glass shield is included, mounted to front of lamp fixture.

Adjustability
Fixture provides vertical rotation of 90° and horizontal rotation of 330°; providing a wide range of light source aiming possibilities.

Dimming
The track fixture is dimmable when used with electronic line voltage rated dimming controls only. 120V / 60Hz input; 120V output; 150W maximum load.

Compatibility
Liteline track fixtures are compatible with A-Line, Juno®, Halo®, Lightolier® and most brands configured to Halo® track system design.

Labels
- cULus listed.

Description

The ATHENA is an adjustable, lightweight, high-styled, exposed lamp design, line voltage track lighting fixture. ATHENA provides a rear load lamping and allows for directional light source for special aiming and assures secure lock on angle position.

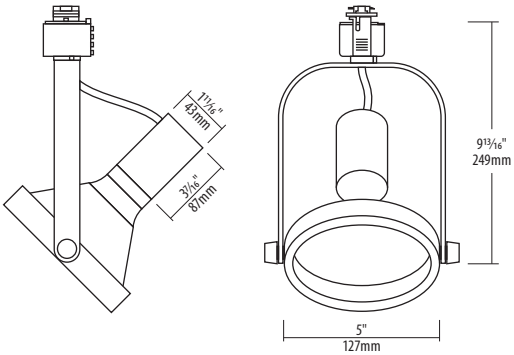

Connector Compatibility Chart

A-Line Style | Liteline® Style | Lightolier® Style | Halo® Style

c UL US LISTED

Notes: Accessories should be ordered separately. For additional options please consult your Liteline representative. Juno is a registered trademark of Juno Lighting Group. Halo is a registered trademark of Cooper Lighting. Lightolier is a registered trademark of Philips.
Due to our continued efforts to improve our products, product specifications are subject to change without notice.

Ordering Guide

Connector Type		Trim Finish	Pendant Style
[ ]	- PAR222/38 -	[ ]	- [ ]
Leave blank for Liteline (TK)		**BK :** Black	Leave blank for no rod
A : A-Line (ATK)		**BN :** Brushed Nickel	**12 :** 12" stem rod
H : Halo Compatible		**WH :** White	**18 :** 18" stem rod
L : Lightolier Compatible			**24 :** 24" stem rod
			36 : 36" stem rod
			48 : 48" stem rod

QUICKSHIP 2-DAY

* QuickShip lead time may vary for orders greater than 100 pieces. No additional shipment rates apply. Subject to availability.

Liteline Corporation

Copyright © 2022
All rights reserved.

Telephone
416.996.1856
1.866.730.7704

Fax
905.709.5255
1.888.738.9736

LITELINE.COM